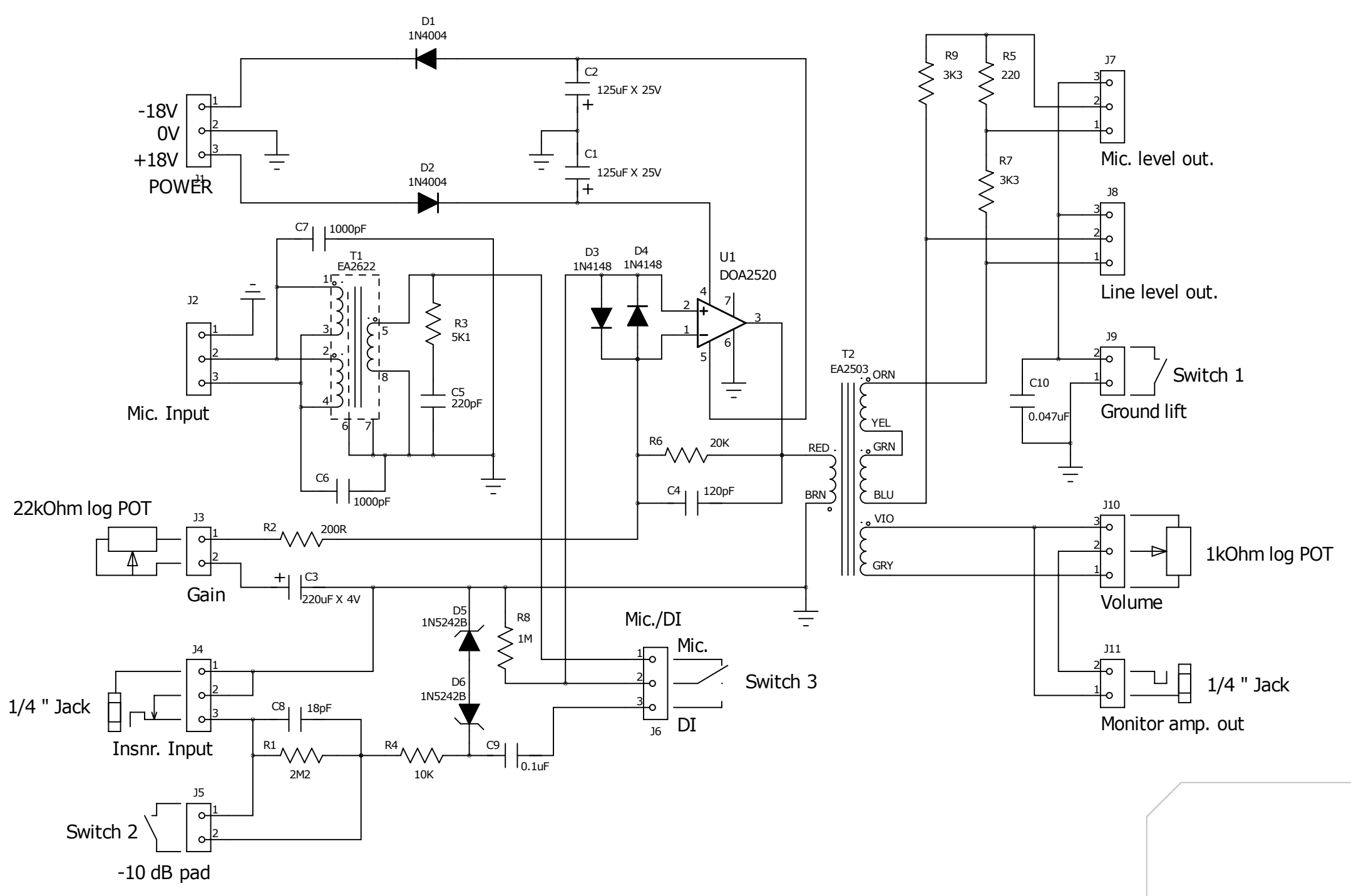
D1
1N4004
D2
1N4004
C2
125uF X 25V
C1
125uF X 25V
-18V
0V
+18V
POWER
J1
C7
1000pF
T1
EA2622
J2
Mic. Input
R3
5K1
C5
220pF
C6
1000pF
D3
1N4148
D4
1N4148
U1
DOA2520
R6
20K
C4
120pF
22kOhm log POT
J3
R2
200R
Gain
C3
220uF X 4V
D5
1N5242B
D6
1N5242B
R8
1M
Mic./DI
Mic.
Switch 3
DI
J6
J4
1/4 " Jack
Insnr. Input
C8
18pF
R1
2M2
R4
10K
C9
0.1uF
J5
Switch 2
-10 dB pad
R9
3K3
R5
220
R7
3K3
J7
Mic. level out.
J8
Line level out.
J9
Switch 1
Ground lift
C10
0.047uF
T2
EA2503
ORN
YEL
GRN
BLU
VIO
GRY
RED
BRN
J10
1kOhm log POT
Volume
J11
1/4 " Jack
Monitor amp. out